EMC TEST REPORT
For

IYSERT ENERGY RESEARCH PRIVATE LIMITED

Product Name:	**Solar power light**
Trademark:	**N/A**
Model :	**cssty-230** **cssty-205,cssty-208,cssty-212,cssty-215** **cssty-218,cssty-220,cssty-225,cssty-240** **cssty-250,cssty-260, cssty-270,cssty-280,** **cssty-290cssty-2100,cssty-2150,cssty-2200.**
Prepared For : Address:	**IYSERT ENERGY RESEARCH PRIVATE LIMITED** D-64 KARHANI , KALWAR ROAD , JAIPUR -302012 . (RAJASTHAN) INDIA
Prepared By : Address:	**Shenzhen SCS Technology Co., Ltd.** Room 615-618,Decheng Commercial Building, No.33 Jia An Road, Bao An 41st. District , Shenzhen, Guangdong, China (518101)
Test Date:	**Jun.06,2016- Jun.12,2016**
Date of Report :	**Jun.12,2016**
Report No.:	**SCS163890J50500065E**

TABLE OF CONTENTS

TEST REPORT DECLARATION

Applicant	:	**IYSERT ENERGY RESEARCH PRIVATE LIMITED**
Address	:	D-64 KARHANI , KALWAR ROAD , JAIPUR -302012 . (RAJASTHAN) INDIA
Manufacturer	:	**IYSERT ENERGY RESEARCH PRIVATE LIMITED**
Address	:	D-64 KARHANI , KALWAR ROAD , JAIPUR -302012 . (RAJASTHAN) INDIA
EUT Description	:	**Solar power light**
Model Number	:	**cssty-230**

Test Procedure Used:

EMI : EN 55015: 2013
EN 61000-3-2 :2006+A1:2009+A2:2009, EN 61000-3-3 :2013

EMS : EN 61547: 2009
EN 61000-4-2 :2009, EN 61000-4-3 :2006+A1:2008+A2:2010,
EN 61000-4-4 :2012, EN 61000-4-5 :2006,
EN 61000-4-6 :2014, EN 61000-4-8 :2010, EN 61000-4-11 :2004

The EUT described above is tested by Shenzhen SCS Technology Co., Ltd. to determine the maximum emissions from the EUT and ensure the EUT to be compliance with the immunity requirements of the EUT. Shenzhen SCS Technology Co., Ltd. is assumed full responsibility for the accuracy of the test results. Also, this report shows that the EUT is technically compliant with the EN55015, EN61000-3-2, EN61000-3-3 and EN61547.

The test report is valid for above tested sample only and shall not be reproduced in part without written approval of Shenzhen SCS Technology Co., Ltd.

Date of Test: **Jun.06- Jun.12,2016**

Prepared by(Engineer): Jack

Reviewer(Quality Manager): Andy

Approved & Authorized Signer(Manager):

1. GENERAL INFORMATION

1.1.Report information

1.1.1.This report is not a certificate of quality; it only applies to the sample of the specific product/equipment given at the time of its testing. The results are not used to indicate or imply that they are application to the similar items. In addition, such results must not be used to indicate or imply that SCS approves recommends or endorses the manufacture, supplier or use of such product/equipment, or that SCS in any way guarantees the later performance of the product/equipment.

1.1.2.The sample/s mentioned in this report is/are supplied by Applicant, SCS therefore assumes no responsibility for the accuracy of information on the brand name, model number, origin of manufacture or any information supplied.

1.1.3.Additional copies of the report are available to the Applicant at an additional fee. No third part can obtain a copy of this report through SCS, unless the applicant has authorized SCS in writing to do so.

1.2.Measurement Uncertainty

Available upon request.

2. PRODUCT DESCRIPTION

2.1.EUT Description

Description :	**Solar power light**
Applicant :	**IYSERT ENERGY RESEARCH PRIVATE LIMITED** D-64 KARHANI , KALWAR ROAD , JAIPUR -302012 . (RAJASTHAN) INDIA
Manufacturer :	**IYSERT ENERGY RESEARCH PRIVATE LIMITED** D-64 KARHANI , KALWAR ROAD , JAIPUR -302012 . (RAJASTHAN) INDIA
Model Number :	**cssty-230**

2.2.Block Diagram of Test Setup

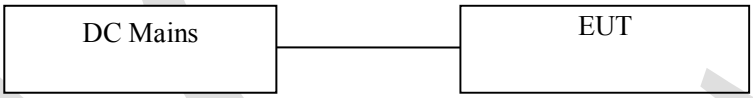

Operating Condition of EUT

Test mode 1: Work model

2.3.Test Conditions

Temperature: 23-25℃
Relative Humidity: 55-68 %

2.4.Modifications

No modification was made.

2.5.Abbreviations

AC	Alternating Current
AMN	Artificial Mains Network
DC	Direct Current
EM	ElectroMagnetic
EMC	ElectroMagnetic Compatibility
EUT	Equipment Under Test
IF	Intermediate Frequency
RF	Radio Frequency
rms	root mean square
EMI	Electromagnetic Interference
EMS	Electromagnetic Susceptibility

2.6.Performance Criterion

Criterion A: The equipment shall continue to operate as intended without operator intervention. No degradation of performance of loss of function is allowed below a performance level specified by the manufacturer when the equipment is used as intended.

Criterion B: After the test, the equipment shall continue to operate as intended without operator intervention. No degradation of performance or loss of function is allowed, after the application of the phenomena below a performance level specified by the manufacturer, when the equipment is used as intended.

Criterion C: Loss of function is allowed, provided the function is self-recoverable, or can be restored by the operation of the controls by the user in accordance with the manufacturer's instructions.

3. TEST EQUIPMENT USED

3.1.For Conducted Emission Test

Item	Equipment	Manufacturer	Model No.	Serial No.	Last Cal.	Cal. Interval
1	Test Receiver	Rohde & Schwarz	ESHS30	828985/018	Oct. 15, 15	1 Year
2	Pulse Limiter	Rohde & Schwarz	ESH3-Z2	100006	Oct. 15, 15	1 Year
3	L.I.S.N.	Rohde & Schwarz	ESH2-Z5	834549/005	Oct. 15, 15	1 Year
4	Conical	Emtek	N/A	N/A	N/A	N/A
5	Voltage Probe	Schwarzbeck	TK9416	N/A	Oct. 15, 15	1 Year
6	Coaxial Switch	Anritsu	MP59B	6100214550	Oct. 15, 15	1 Year

3.2.For Magnetic Test (In Shielding Room)

Item	Equipment	Manufacturer	Model No.	Serial No.	Last Cal.	Cal. Interval
1	Test Receiver	Rohde & Schwarz	ESHS30	828985/018	Oct. 15, 15	1 Year
2	Triple-loop Antenna	Rohde & Schwarz	HM020	843885/002	Oct. 15, 15	1 Year
3	RF Cable	MIYAZAKI	5D-2W	Tri-loop Cable	Oct. 15, 15	1 Year
4	Coaxial Switch	Anritsu	MP59B	M73989	Oct. 15, 15	1 Year

3.3.For Harmonic / Flicker Test

Item	Equipment	Manufacturer	Model No.	Serial No.	Last Cal.	Cal. Interval
1	Power Frequency test system	HAEFELY	PHF555	080419-03	Oct. 15, 15	1 Year

3.4.For Electrostatic Discharge Immunity Test

Item	Equipment	Manufacturer	Model No.	Serial No.	Last Cal.	Cal. Interval
1	ESD Tester	HAEFELY	PSD 1600	H911'292	Oct. 15, 15	1 Year

3.5.For RF Strength Susceptibility Test

Item	Equipment	Manufacturer	Model No.	Serial No.	Last Cal.	Cal. Interval
1	Signal Generator	HP	8648A	3633A02081	Oct. 15, 15	1 Year
2	Amplifier	A&R	500A100	17034	N/A	N/A
3	Amplifier	A&R	100W/1000M1	17028	N/A	N/A
4	Isotropic Field Monitor	A&R	FM2000	16829	N/A	N/A
5	Isotropic Field Probe	A&R	FLW220100	16755	Oct. 15, 15	1 Year
6	Biconic Antenna	EMCO	3108	9507-2534	N/A	N/A
7	Log-periodic Antenna	A&R	AT1080	16812	N/A	N/A
8	PC	N/A	486DX2	N/A	N/A	N/A

3.6.For Electrical Fast Transient/Burst Immunity Test

Item	Equipment	Manufacturer	Model No.	Serial No.	Last Cal.	Cal. Interval
1	Burst Tester	HAEFELY	PEFT4010	080981-16	Oct. 15, 15	1 Year
2	Coupling Clamp	HAEFELY	IP-4A	147147	Oct. 15, 15	1 Year

3.7.For Surge Test

Item	Equipment	Manufacturer	Model No.	Serial No.	Last Cal.	Cal. Interval
1	Surge Tester	HAEFELY	PSURGE4.1	080107-04	Oct. 15, 15	1 Year

3.8.For Injected Currents Susceptibility Test

Item	Equipment	Manufacturer	Model No.	Serial No.	Last Cal.	Cal. Interval
1	Simulator	EMTEST	CWS 500C	0900-12	Oct. 15, 15	1 Year
2	CDN	EMTEST	CDN-M2	510010010010	Oct. 15, 15	1 Year
3	VDN	EMTEST	CDN-M3	0900-11	Oct. 15, 15	1 Year
4	Injection Clamp	EMTEST	F-2031-23MM	368	Oct. 15, 15	1 Year
5	Attenuator	EMTEST	ATT6	0010222a	Oct. 15, 15	1 Year

3.9.For Magnetic Field Immunity Test

Item	Equipment	Manufacturer	Model No.	Serial No.	Last Cal.	Cal. Interval
1	Magnetic Field Tester	HEAFELY	MAG100.1	083858-10	Oct. 15, 15	1 Year

3.10.For Voltage Dips and Interruptions Test

Item	Equipment	Manufacturer	Model No.	Serial No.	Last Cal.	Cal. Interval
1	Dips Tester	HEAFELY	PLINE 1610	083732-18	Oct. 15, 15	1 Year

3.11.For Radiated emission Test

Item	Equipment	Manufacturer	Model No.	Serial No.	Last Cal.	Cal. Interval
1.	Spectrum Analyzer	ANRITSU	MS2661C	6200140915	Oct. 15, 15	1 Year
2.	Test Receiver	Rohde & Schwarz	ESHS30	828985/018	Oct. 15, 15	1 Year
3.	Bilog Antenna	Schwarzbeck	VULB9163	142	Oct. 15, 15	1 Year
4.	50 Coaxial Switch	Anritsu Corp	MP59B	6100237248	Oct. 15, 15	1 Year
5.	EMI Power Line Filter	DUOJI EME	FNF 201 B16	N/A	Oct. 15, 15	1 Year
6.	EMI Power Line Filter	JIANLI	DL-40C	N/A	Oct. 15, 15	1 Year
7.	Cable	Schwarzbeck	AK9513	ACRX1	Oct. 15, 15	1 Year
8.	Cable	Rosenberger	N/A	FP2RX2	Oct. 15, 15	1 Year
9.	Cable	Schwarzbeck	AK9513	CRPX1	Oct. 15, 15	1 Year
10.	Cable	Schwarzbeck	AK9513	CRRX2	Oct. 15, 15	1 Year
11.	Signal Generator	HP	8648A	3625U00573	Oct. 15, 15	1 Year

4. POWER LINE CONDUCTED EMISSION TEST

4.1.Block Diagram of Test Setup

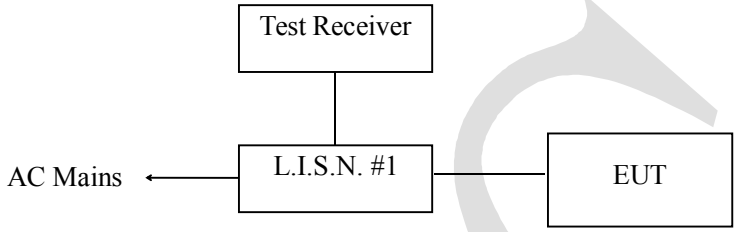

4.2.Test Standard

EN55015: 2013

4.3.Power Line Conducted Emission Limit

Frequency	At mains terminals (dBμV)	
	Quasi-peak Level	Average Level
9KHz ~ 50KHz	110	N/A
50KHz ~ 150KHz	90 ~ 80*	N/A
150KHz ~ 0.5MHz	66 ~ 56*	56 ~ 46*
0.5MHz ~ 5.0MHz	56	46
5 MHz ~ 30MHz	60	50

1. At the transition frequency the lower limit applies.
2. * decreasing linearly with logarithm of the frequency.

4.4.EUT Configuration on Test

The following equipments are installed on conducted emission test to meet EN55015 requirement and operating in a manner, which tends to maximize its emission characteristics in a normal application.

4.4.1. **Solar power light** (EUT)

Model Number : **cssty-230**

Manufacturer : **IYSERT ENERGY RESEARCH PRIVATE LIMITED**

4.5. Operating Condition of EUT

4.5.1. Setup the EUT and simulators as shown in Section 4.1.

4.5.2. Turn on the power of all equipments.

4.5.3. Let the EUT work in test modes (EUT WORKING) and test it.

4.6. Test Procedure

The EUT is put on the table which is 0.8 meter high above the ground and connected to the AC mains through a Line Impedance Stabilization Network (L.I.S.N.). This provided a 50ohm coupling impedance for the tested equipments. Both sides of AC line are checked to find out the maximum conducted emission according to the **EN55015** regulations during conducted emission test. And the voltage probe had been used for the load terminals test according to the **EN55015** standard.

The bandwidth of the test receiver (R&S Test Receiver ESHS30) is set at 10KHz. In 150KHz~30MHz and 200Hz bandwidth in 9KHz~150KHz.

The frequency range from 9KHz to 30MHz is checked.

4.7. Test Result

N/A

5. MAGNETIC TEST

5.1. Block Diagram of Test Setup

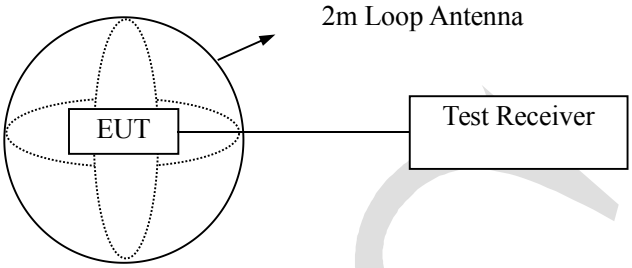

(EUT: Solar power light)

5.2. Test Standard

EN 55015:2013

5.3. Magnetic Field Emission Limits

Frequency	Limits for loop diameter (DbμA)
	2m
9KHz ~ 70KHz	88
70KHz ~ 150KHz	88 ~ 58*
150KHz ~ 3.0MHz	58 ~ 22*
3.0MHz ~ 30MHz	22

1. At the transition frequency the lower limit applies.
2. * decreasing linearly with logarithm of the frequency.

5.4. EUT Configuration on Test

The configuration of the EUT is same as Section 3.2..

5.5. Operating Condition of EUT

5.5.1. Setup the EUT as shown in Section 5.1.

5.5.2. Turn on the power of all equipments.

5.5.3. Let the EUT work in test mode (ON) and test it.

5.6. Test Procedure

The EUT is placed on a wood table in the center of a loop antenna. The induced current in the loop antenna is measured by means of a current probe and the test receiver. Three field components is checked by means of a coax switch.

The frequency range from 9KHz to 30MHz is investigated. The receiver is measured with the quasi-peak detector. For frequency band 9KHz to 150KHz, the bandwidth of the field strength meter (R&S Test Receiver ESHS30) is set at 200Hz. For frequency band 150KHz to 30MHz , the bandwidth is set at 10KHz.

All the test results are listed in Section 5.7.

5.7. Test Results

PASSED

The frequency range from 9KHz to 30MHz is investigated.
As the peak value is too low against the limit, so the Quasi-peak value has been omitted. Please refer to the following page.

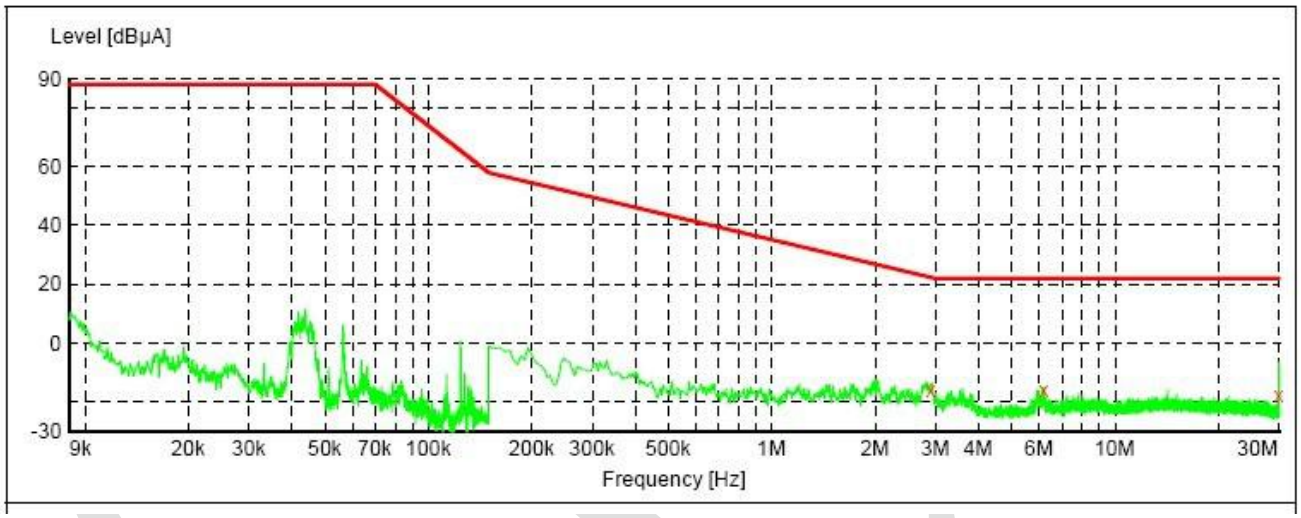

X

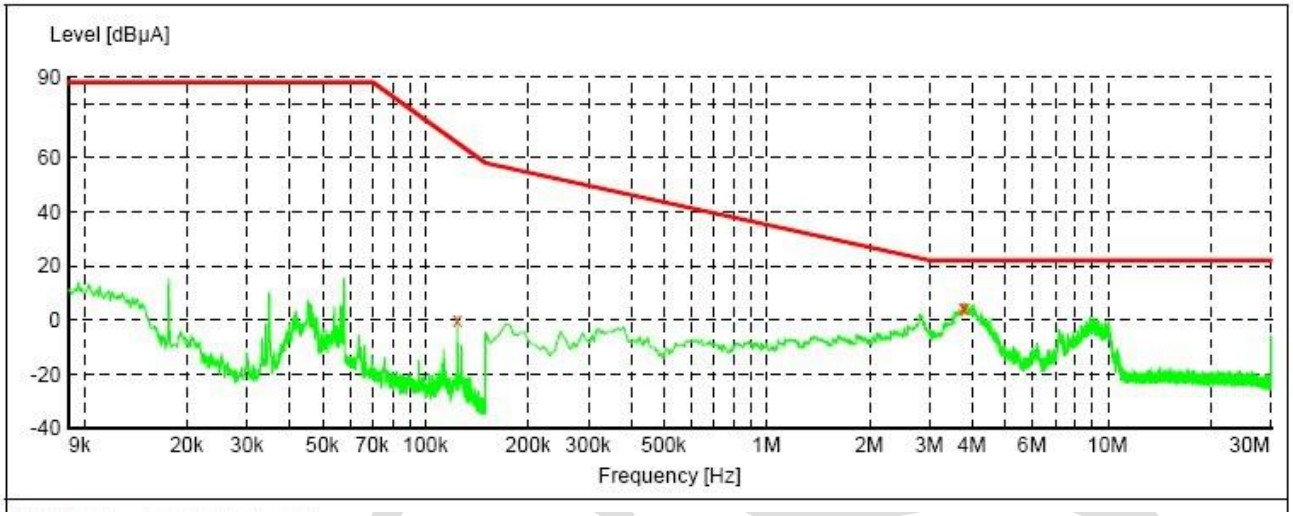
Level [dBµA]
90
60
40
20
0
-20
-40
9k
20k
30k
50k
70k
100k
200k
300k
500k
1M
2M
3M
4M
6M
10M
30M
Frequency [Hz]

Y

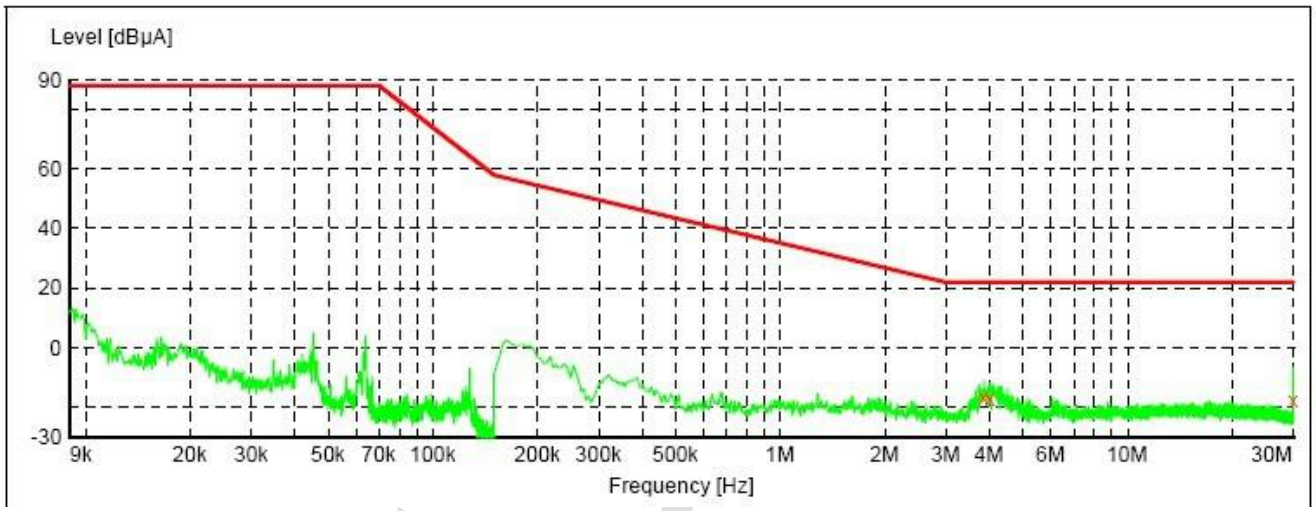
Level [dBµA]
90
60
40
20
0
-30
9k
20k
30k
50k
70k
100k
200k
300k
500k
1M
2M
3M
4M
6M
10M
30M
Frequency [Hz]

Z

6. HARMONIC CURRENT EMISSION TEST

6.1. Block Diagram of Test Setup

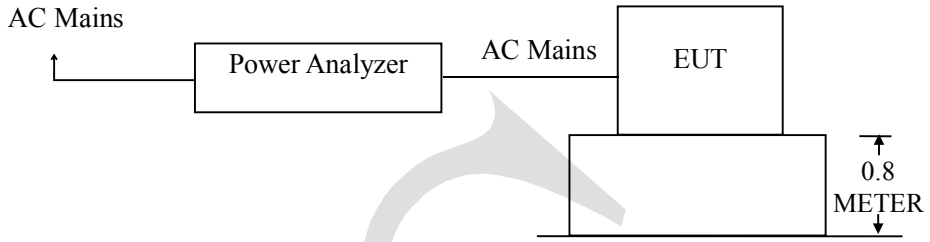

(EUT: Solar power light)

6.2. Test Standard

EN 61000-3-2:2006+A1:2009+A2:2009

6.3. Operating Condition of EUT

6.3.1. Setup the EUT as shown in Section 6.1.

6.3.2. Turn on the power of all equipments.

6.3.3. Let the EUT work in test mode (ON) and test it.

6.4. Test Procedure

The power cord of the EUT is connected to the output of the test system. Turn on the Power of the EUT and use the test system to test the harmonic current level.

6.5. Test Results

N/A

7. VOLTAGE FLUCTUATIONS & FLICKER TEST

7.1. Block Diagram of Test Setup

Same as Section 6.1..

7.2. Test Standard

EN 61000-3-3:2013

7.3. Operating Condition of EUT

Same as Section 6.3.. The power cord of the EUT is connected to the output of the test system. Turn on the power of the EUT and use the test system to test the harmonic current level.

Flicker Test Limit

Test items	Limits
Pst	1.0
dc	3.3%
dmax	4.0%
dt	Not exceed 3.3% for 500ms

7.4. Test Results

N/A

8. ELECTROSTATIC DISCHARGE TEST

8.1.Block Diagram of ESD Test Setup

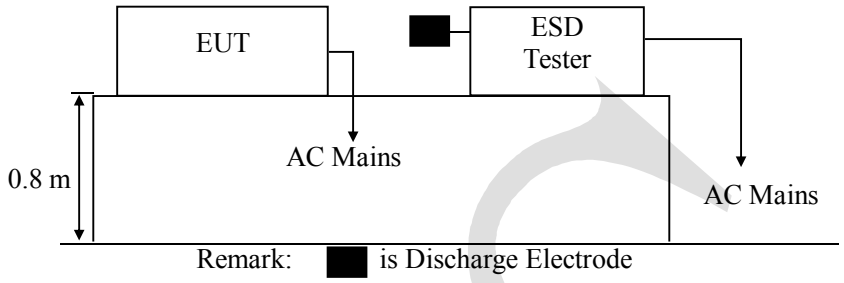

8.2.Test Standard

EN 61547:2009 (EN61000-4-2:2009)
Severity Level 3 for Air Discharge at 8KV
Severity Level 2 for Contact Discharge at 4KV

8.3.Severity Levels and Performance Criterion

8.3.1.Severity level

Level	Test Voltage Contact Discharge (KV)	Test Voltage Air Discharge (KV)
1.	2	2
2.	4	4
3.	6	8
4.	8	15
X.	Special	Special

8.3.2.Performance criterion: B

8.4.EUT Configuration on Test

The configuration of EUT are listed in Section 3.4.

8.5.Operating Condition of EUT

8.5.1.Setup the EUT as shown in Section 8.1..

8.5.2.Turn on the power of all equipments.

8.5.3.Let the EUT work in test mode (Working Mode) and test it.

8.6.Test Procedure

8.6.1.Air Discharge:

This test is done on a non-conductive surfaces. The round discharge tip of the discharge electrode shall be approached as fast as possible to touch the EUT.
After each discharge, the discharge electrode shall be removed from the EUT.
The generator is then re-triggered for a new single discharge and repeated 10 times for each pre-selected test point. This procedure shall be repeated until all the air discharge completed.

8.6.2.Contact Discharge:

All the procedure shall be same as Section 8.6.1. except that the tip of the discharge electrode shall touch the EUT before the discharge switch is operated.

8.6.3.Indirect discharge for horizontal coupling plane

At least 20 single discharges shall be applied to the horizontal coupling plane, at points on each side of the EUT. The discharge electrode positions vertically at a distance of 0.1m from the EUT and with the discharge electrode touching the coupling plane.

8.6.4.Indirect discharge for vertical coupling plane

At least 20 single discharge shall be applied to the center of one vertical edge of the coupling plane. The coupling plane, of dimensions 0.5m X 0.5m, is placed parallel to, and positioned at a distance of 0.1m from the EUT. Discharges shall be applied to the coupling plane, with this plane in sufficient different positions that the four faces of the EUT are completely illuminated.

8.7.Test Results

PASSED

Please refer to the following page.

Electrostatic Discharge Test Results

Shenzhen SCS Technology Co., Ltd.

Applicant :	**IYSERT ENERGY RESEARCH PRIVATE LIMITED**	Test Date :	Jun.07,2016
EUT :	Solar power light	Temperature:	25℃
M/N :	cssty-230	Humidity :	53%
Power Supply :	DC12V		
Test Engineer :	Jack		

Air Discharge: ± 8KV

Contact Discharge: ± 4KV # For each point positive 25 times and negative 25 times discharge

Test Points	Air Discharge	Contact Discharge	Performance Criterion	Result
Others Slot of the EUT	±2,4,8KV	N/A	A	PASSED
COVER	±2,4,8KV	N/A	A	PASSED
SCREW	N/A	±2,4 KV	A	PASSED
VCP	N/A	±2,4 KV	A	PASSED
HCP	N/A	±2,4 KV	A	PASSED

9. RF FIELD STRENGTH SUSCEPTIBILITY TEST

9.1.R/S Test Setup

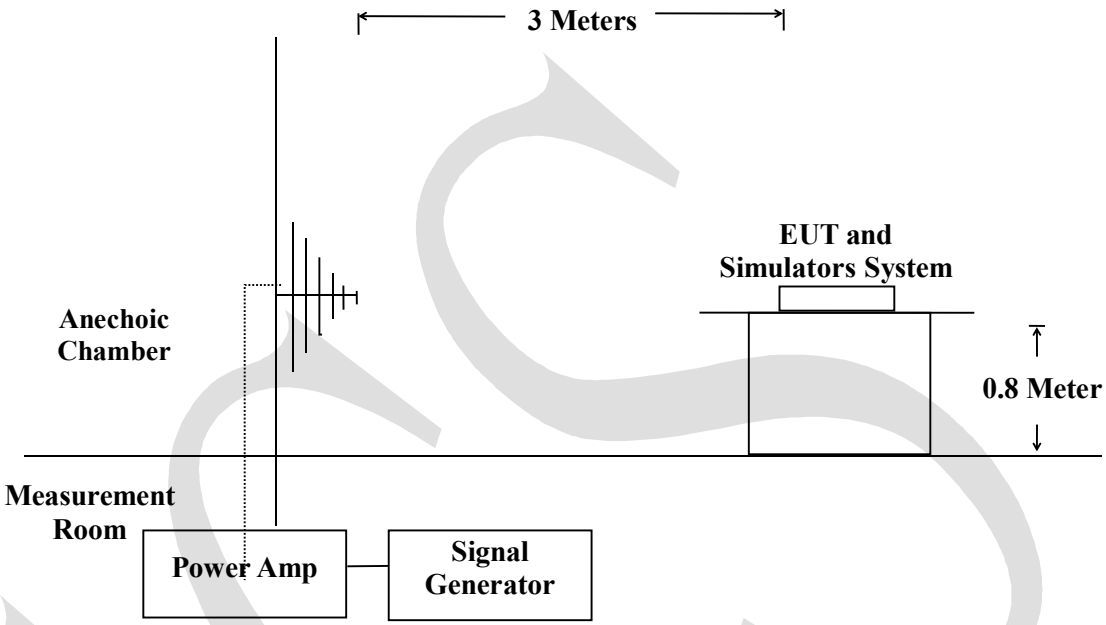

9.2.Test Standard

EN 61547:2009 (EN 61000-4-3: 2006+A1:2008+A2:2010)
Severity Level 2 at 3V / m

9.3.Severity Levels and Performance Criterion

9.3.1.Severity level

Level	Field Strength V/m
1.	1
2.	3
3.	10
X.	Special

9.3.2.Performance criterion : A

9.4.EUT Configuration on Test

The configuration of EUT are listed in Section 3.5..

9.5. Operating Condition of EUT

Setup the EUT as shown in Section 9.1.. The operating condition of EUT are listed in section 3.5.

9.6. Test Procedure

The EUT and its simulators are placed on a turn table which is 0.8 meter above the ground. The EUT is set 3 meters away from the transmitting antenna which is mounted on an antenna tower. Both horizontal and vertical polarization of the antenna are set on test. Each of the four sides of EUT must be faced this transmitting antenna and measured individually.
In order to judge the EUT performance, a CCD camera is used to monitor the EUT.
All the scanning conditions are as follows **:**

Condition of Test	Remarks
1. Fielded Strength	3 V/m (Severity Level 2)
2. Radiated Signal	Modulated
3. Scanning Frequency	80 - 1000 MHz
4. Sweeping time of radiated	0.0015 decade/s
5. Dwell Time	1 Sec.

9.7. Test Results

PASSED
Please refer to the following page.

RF Field Strength Susceptibility Test Results

Shenzhen SCS Technology Co., Ltd.

Applicant: **IYSERT ENERGY RESEARCH PRIVATE LIMITED**			Test Date : Jun.08,2016
EUT : Solar power light			Temperature : 25℃
M/N : cssty-230			Humidity : 53%
Field Strength: 3 V/m			Criterion: A
Power Supply: DC12V			Frequency Range: 80 MHz to 1000 MHz
Test Engineer: Jack			
Modulation: ☑ AM ☐ Pulse ☐none 1 KHz 80%			
Test Mode **:** On			
	Frequency Range : 80-1000MHz		
Steps	1 %		
	Horizontal	Vertical	Result
Front	A	A	Passed
Right	A	A	Passed
Rear	A	A	Passed
Left	A	A	Passed

10. ELECTRICAL FAST TRANSIENT/BURST IMMUNITY TEST

10.1 Block Diagram of EUT Test Setup

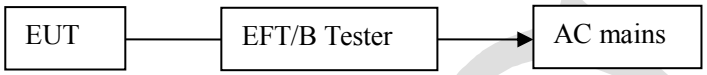

10.2 Test Standard

EN61547: 2009 (EN61000-4-4:2012)
Severity Level 2 at 1KV

10.3 Severity Levels and Performance Criterion

Severity Level 2 at 1KV, Pulse Rise time & Duration: 5 nS / 50 nS
Severity Level:

Open Circuit Output Test Voltage ±10%		
Level	On Video Optical Lines	On I/O(Input/Output) Signal data and control lines
1.	0.5KV	0.25KV
2.	1KV	0.5KV
3.	2KV	1KV
4.	4KV	2KV
X.	Special	Special

Performance criterion: B

A. The apparatus shall continue to operate as intended during and after the test. No degradation of performance or loss of function is allowed below a performance level specified by the manufacturer, when the apparatus is used as intended.

B. The apparatus shall continue to operate as intended after the test. No degradation of performance or loss of function is allowed below a performance level specified by the manufacturer, when the apparatus is used as intended. The performance level may be replaced by a permissible loss of performance. During the test, degradation of performance is however allowed.

C. Temporary loss of function is allowed, provided the function is self-recoverable or can be restored by the operation of the controls.

10.4 EUT Configuration on Test

The following equipments are installed on Electrical Fast Transient/Burst Immunity

test to meet EN 61547:2009， EN 61000-4-4:2012, requirement and operating in a manner which tends to maximize its emission characteristics in a normal application. The configuration of EUT is the same as used in conducted emission test.
Please refer to Section 3.6.

10.5 Operating Condition of EUT

Same as conducted emission measurement, which is listed in Section 3.6 except the test setup replaced by Section 10.1.

10.6 Test Procedure

EUT shall be placed 0.8m high above the ground reference plane which is a min.1m*1m metallic sheet with 0.65mm minimum thickness. This reference ground plane shall project beyond the EUT by at least 0.1m on all sides and the minimum distance between EUT and all other conductive structure, except the ground plane beneath the EUT, shall be more than 0.5m

10.6.1. For input and output AC power ports:

The EUT is connected to the power mains by using a coupling device which couples the EFT interference signal to AC power lines. Both polarities of the test voltage should be applied during compliance test and the duration of the test is 2 minutes.

10.6.2. For signal lines and control lines ports:

It’s unnecessary to measure.

10.6.3. For AC input and DC output power ports:

It’s unnecessary to measure

10.7 Test Results

N/A

11. SURGE TEST

11.1.Surge Test Setup

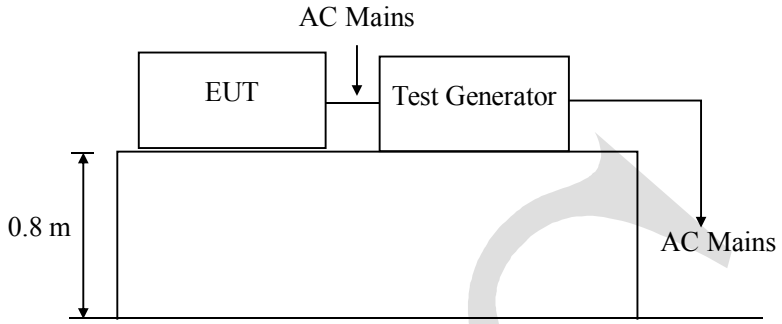

11.2.Test Standard

EN 61547:2009 (EN61000-4-5:2006)
Severity Level 2 for Line to Neutral at 1.0KV

11.3.Severity Levels and Performance Criterion

11.3.1.Severity level

Severity Level	Open-Circuit Test Voltage KV
1	0.5
2	1.0
3	2.0
4	4.0
*	Special

Performance criterion **: C**

11.4.EUT Configuration on Test

The configuration of EUT are listed in Section 3.7.

11.5.Operating Condition of EUT

11.5.1.Setup the EUT as shown in Section 11.1.

11.5.2.Turn on the power of all equipments.

11.5.3.Let the EUT work in test mode (Working Mode) and test it.

11.6.Test Procedure

1) Set up the EUT and test generator as shown on Section 11.1
2) For line to line coupling mode, provide a 0.5KV 1.2/50us voltage surge (at open-circuit condition) and 8/20us current surge to EUT selected points.
3) At least 5 positive and 5 negative (polarity) tests with a maximum 1/min repetition rate are conducted during test.
4) Different phase angles are done individually.
5) Record the EUT operating situation during compliance test and decide the EUT immunity criterion for above each test.

11.7.Test Results

N/A

12. INJECTED CURRENTS SUSCEPTIBILITY TEST

12.1 Block Diagram of EUT Test Setup

12.1.1. Block Diagram of EUT Test Setup

12.1.2. Block Diagram of Test Setup

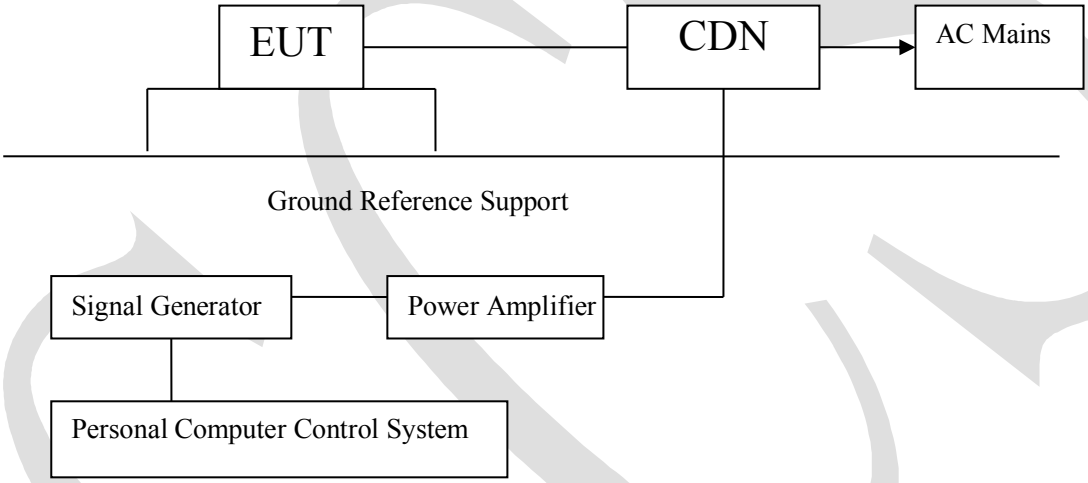

12.2 Test Standard

EN 61547:2009 (EN61000-4-6:2014)

12.3 Severity Levels and Performance Criterion

Severity Level 2：3V(rms), 150KHz ～ 80MHz
Severity Level:

Level	Field Strength V
1.	1
2.	3
3.	10
X.	Special

Performance criterion: A

A. The apparatus shall continue to operate as intended during and after the test. No degradation of performance or loss of function is allowed below a performance level specified by the manufacturer, when the apparatus is used as intended.

B. The apparatus shall continue to operate as intended after the test. No degradation of performance or loss of function is allowed below a performance level specified by the manufacturer, when the apparatus is used as intended. The performance level may be replaced by a permissible loss of performance. During the test, degradation of performance is however allowed.

C. Temporary loss of function is allowed, provided the function is self-recoverable or can be restored by the operation of the controls.

12.4 EUT Configuration on Test

The configuration of EUT is the same as used in conducted emission test.
Please refer to Section 3.8.

12.5 Operating Condition of EUT

Same as conducted emission test, which is listed in Section 3.5 except the test set up replaced as Section 12.1.

12.6 Test Procedure

1) Set up the EUT,CDN and test generator as shown on section 12.1

2) Let EUT work in test mode and measure.

3) The EUT and supporting equipments are placed on an insulating support 0.1m high above a ground reference plane. CDN (coupling and decoupling device) is placed on the ground plane at above 0.1-0.3m from EUT. Cables between CDN and EUT are as short as possible, and their height above the ground reference plane shall be between 30 and 50 mm (where possible).

4) The disturbance signal described below is injected to EUT through CDN.

5) The EUT operates within its operational mode(s) under intended climatic conditions after power on.

6) The frequency range is swept from 150KHz to 80MHz using 3V signal level, and with the disturbance signal 80% amplitude modulated with a 1KHz sine wave

7) The rate of sweep shall not exceed 1.5×10^{-3} decades/s. Where the frequency is swept

incrementally, the step size shall not exceed 1%of the start and thereafter 1% of the preceding frequency value.

8) Recording the EUT operating situation during compliance test and decide the EUT immunity criterion for above each test.

12.7 Test Result

N/A

13. MAGNETIC FIELD IMMUNITY TEST

13.1 Block Diagram of Test Setup

13.1.1 Block Diagram of the EUT

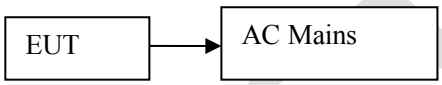

13.1.2 Block Diagram of Test Setup

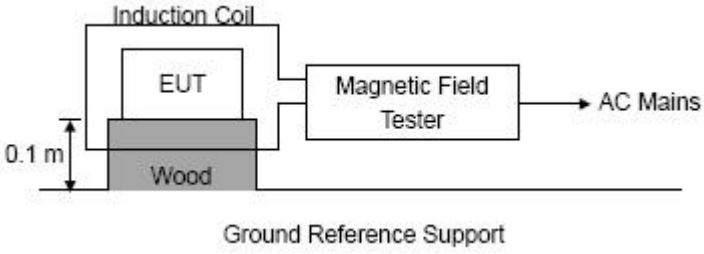

13.2 Test Standard

EN 61547:2009，EN61000-4-8:2010
Severity Level 2 at 3A/m

13.3 Severity Levels and Performance Criterion

13.3.1 Severity level

Level	Magnetic Field Strength A/m
1.	1
2.	3
3.	10
4.	30
5.	100
X.	Special

13.3.2 Performance criterion**:** B

A. The apparatus shall continue to operate as intended during and after the test. No degradation of performance or loss of function is allowed below a performance level specified by the manufacturer, when the apparatus is used as intended.
B. The apparatus shall continue to operate as intended after the test. No degradation of performance or loss of function is allowed below a performance level specified by the manufacturer, when the apparatus is used as intended. The performance level may be replaced by a permissible loss of performance. During the test, degradation of performance is however allowed.
C. Temporary loss of function is allowed, provided the function is self-recoverable or can be restored by the operation of the controls.

13.4 EUT Configuration on Test

The configuration of EUT is listed in Section 3.9.

13.5 Operating Condition of EUT

Same as conducted emission test, which is listed in Section 3.5 except the test set up replaced as Section 13.1.

13.6 Test Procedure

The EUT shall be subjected to the test magnetic field by using the induction coil of standard dimensions (1m*1m) and shown in Section 10.1. The induction coil shall then be rotated by 90° in order to expose the EUT to the test field with different orientations.

13.7 Test Results

N/A

14. VOLTAGE DIPS AND INTERRUPTIONS TEST

14.1 Voltage Dips and Interruptions Test Setup

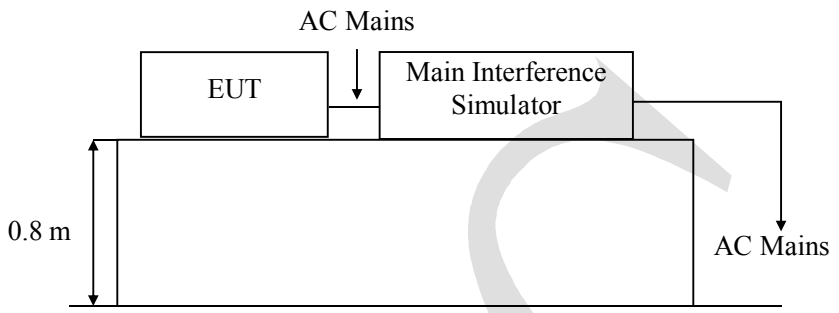

Remark: Combination wave generator and decoupling network are included in test generator.

14.2 Test Standard

EN 61547:2009 (EN61000-4-11:2004)

14.3 Severity Levels and Performance Criterion

14.3.1 Severity level

Test Level %UT	Voltage dip and short interruptions %UT	Duration (in period)
0	100	250p
40	60	5p
70	30	0.5p

Performance criterion : C & B

14.4 EUT Configuration on Test

The configuration of EUT are listed in Section 3.10.

14.5 Operating Condition of EUT

14.5.1 Setup the EUT as shown in Section 14.1.

14.5.2 Turn on the power of all equipments.

14.5.3 Let the EUT work in test mode and test it.

14.6 Test Procedure

14.6.1 Set up the EUT and test generator as shown on Section 14.1.
14.6.2 The interruptions is introduced at selected phase angles with specified duration.
14.6.3 Record any degradation of performance.

14.7 Test Result

N/A

15. RADIATION EMISSION TEST

15.1 Block Diagram of Test Setup

15.1.1.**Block Diagram of EUT Test Setup**

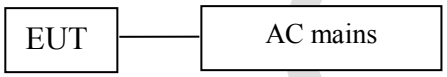

15.1.2.**Anechoic Chamber Setup Diagram**

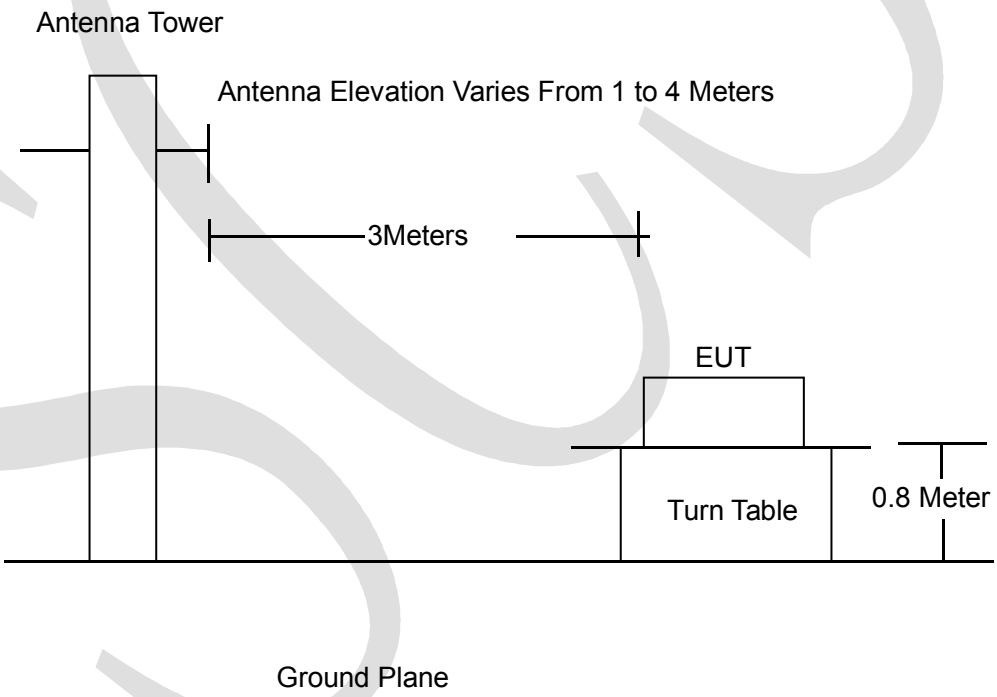

15.2 Test Standard

EN 55015: 2013

15.3 Radiation Limit

Frequency MHz	Distance (Meters)	Field Strengths Limits dB(μV)/m
30 ～ 230	3	40.0
230 ～ 300	3	47.0

Remark:

(1) Emission level (dB(μV)/m) = 20 log Emission level (μV/m)

(2) The smaller limit shall apply at the cross point between two frequency bands.

(3) Distance refers to the distance in meters between the measuring instrument, antenna and the closed point of any part of the device or system.

15.4 EUT Configuration on Test

The EN55015 regulations test method must be used to find the maximum emission during radiated emission test.
The configuration of EUT is the same as used in conducted emission test.
Please refer to Section 3.11.

15.5 Operating Condition of EUT

Same as conducted emission test, which is listed in Section 2.2 except the test set up replaced as Section 15.1.

15.6 Test Procedure

The EUT and its simulators are placed on a turned table that is 0.8 meter above the ground. The turned table can rotate 360 degrees to determine the position of the maximum emission level. The EUT is set 3 meters away from the receiving antenna that is mounted on the antenna tower. The antenna can move up and down between 1 meter and 4 meters to find out the maximum emission level. Broadband antenna (calibrated biconical and log periodical antenna) is used as receiving antenna. Both horizontal and vertical polarization of the antenna is set on test. In order to find the maximum emission levels, the interface cable must be manipulated according to EN55015 on radiated emission test.
The bandwidth setting on the field strength meter (R&S Test Receiver ESHS30) is set at 120KHz.
The frequency range from 30MHz to 300MHz is checked.

15.7 Test Result

PASSED
Please refer to the following page.

No.	Mk.	Freq.	Reading Level	Correct Factor	Measure-ment	Limit	Over		Antenna Height	Table Degree	
		MHz	dBuV	dB/m	dBuV/m	dBuV/m	dB	Detector	cm	degree	Comment
1		58.9008	43.63	-15.47	28.16	40.00	-11.84	peak			
2	*	67.1616	45.28	-16.29	28.99	40.00	-11.01	peak			
3		147.9521	38.72	-13.93	24.79	40.00	-15.21	peak			
4		214.8430	40.76	-16.61	24.15	40.00	-15.85	peak			
5		230.2084	40.79	-15.85	24.94	47.00	-22.06	peak			
6		250.6809	44.43	-14.94	29.49	47.00	-17.51	peak			

Horizontal

No.	Mk.	Freq.	Reading Level	Correct Factor	Measure-ment	Limit	Over		Antenna Height	Table Degree	
		MHz	dBuV	dB/m	dBuV/m	dBuV/m	dB	Detector	cm	degree	Comment
1		41.9876	43.00	-15.36	27.64	40.00	-12.36	peak			
2	*	59.9959	45.38	-15.41	29.97	40.00	-10.03	peak			
3		68.5680	45.13	-16.67	28.46	40.00	-11.54	peak			
4		115.6435	38.94	-16.12	22.82	40.00	-17.18	peak			
5		126.5090	37.18	-15.34	21.84	40.00	-18.16	peak			
6		210.9217	40.74	-16.73	24.01	40.00	-15.99	peak			

Vertical

16. APPENDIX I EUT PHOTO

EUT Photo 1

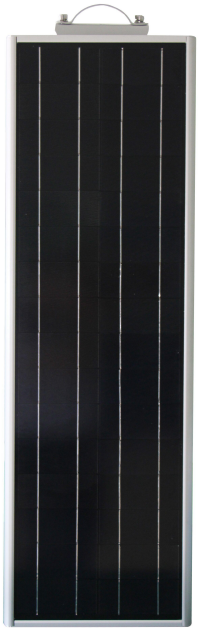

EUT Photo 2

※※※※※ **END OF REPORT** ※※※※※